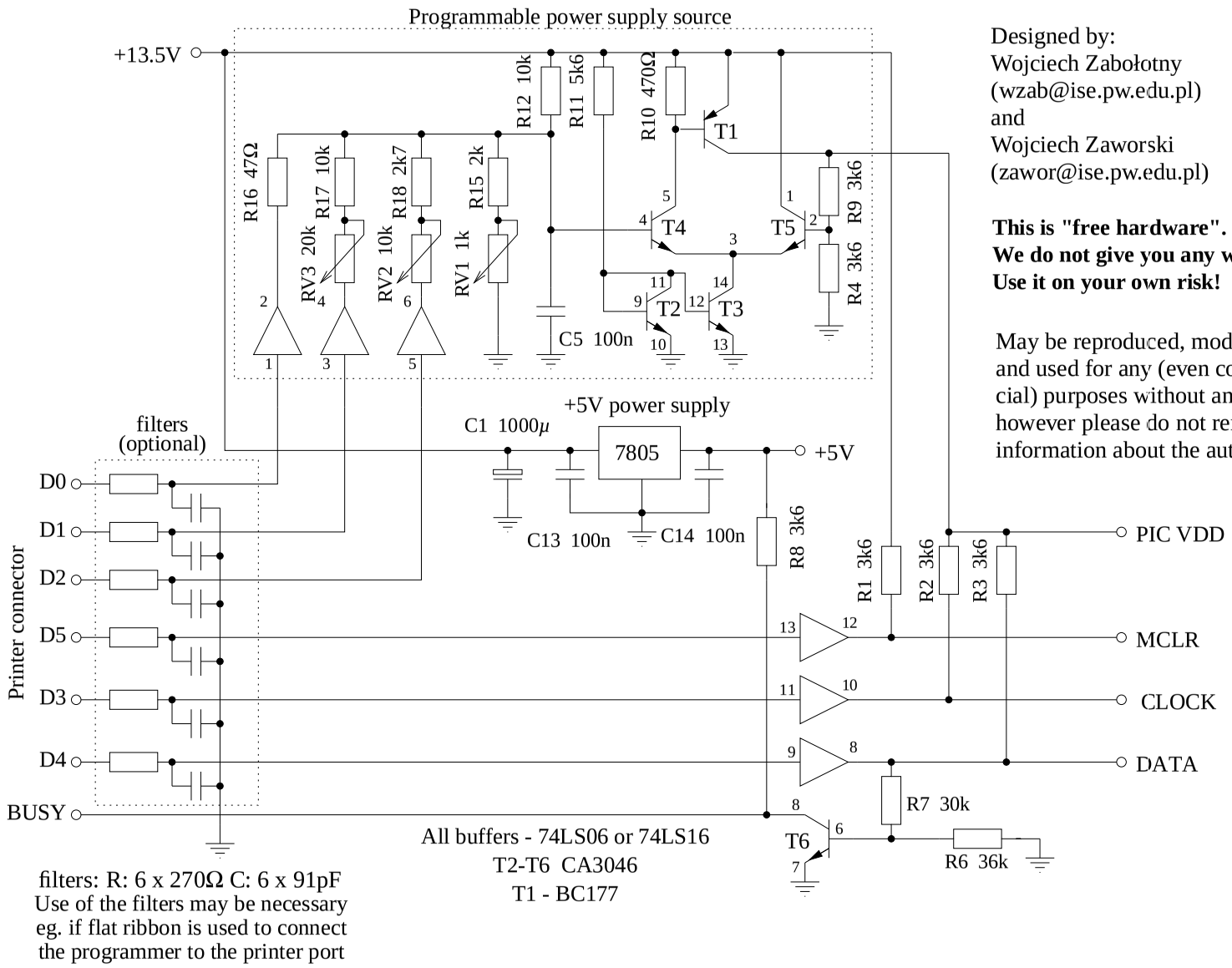

filters: R: 6 x 270Ω C: 6 x 91pF
Use of the filters may be necessary
eg. if flat ribbon is used to connect
the programmer to the printer port

Designed by:
Wojciech Zabołotny
(wzab@ise.pw.edu.pl)
and
Wojciech Zaworski
(zawor@ise.pw.edu.pl)

This is "free hardware".
We do not give you any warranty.
Use it on your own risk!

May be reproduced, modified and used for any (even commercial) purposes without any fee, however please do not remove information about the authors.